REVISIONS				
ZONE	REV	DESCRIPTION	DATE	APPROVED
	N	SEE SHEET 1.		

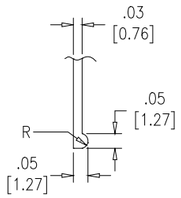

SECTION B–B
SCALE: 4/1
4X

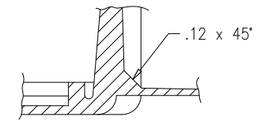

DETAIL G
SCALE: 2/1
2X

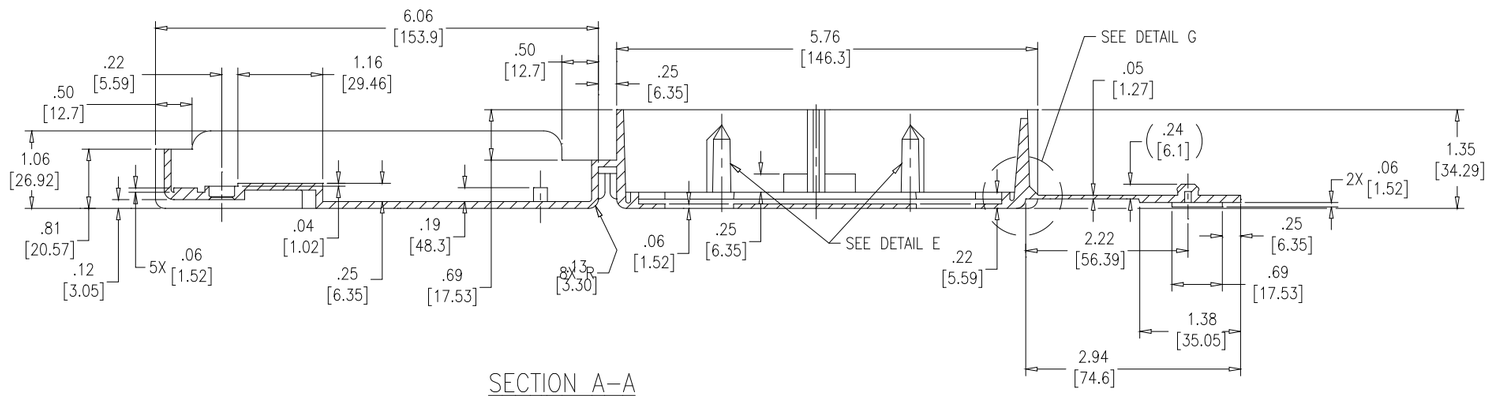

SECTION A–A

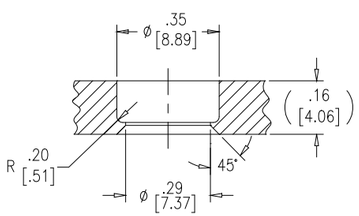

SECTION C–C
SCALE: 4/1
2X

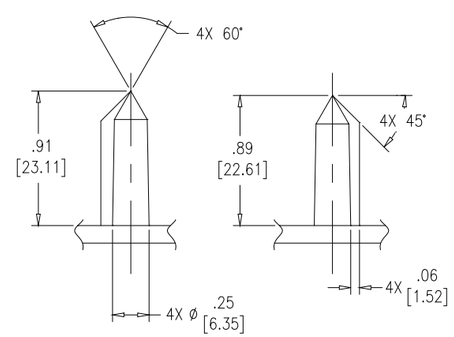

DETAIL E
SCALE: 2/1

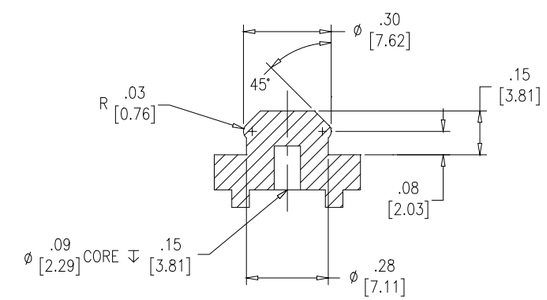

SECTION D–D
SCALE: 4/1
2X

THIRD ANGLE PROJECTION

National Library Service for the Blind and Physically Handicapped
The Library of Congress

DRAWN	S.COLE	98–07–07	SIZE D	DWG NO. LC604–1EV		REV N
CHECKED	R.BAYLY	98–08–18	SCALE 1/1	UNIT WT.		SHEET 2 OF 2